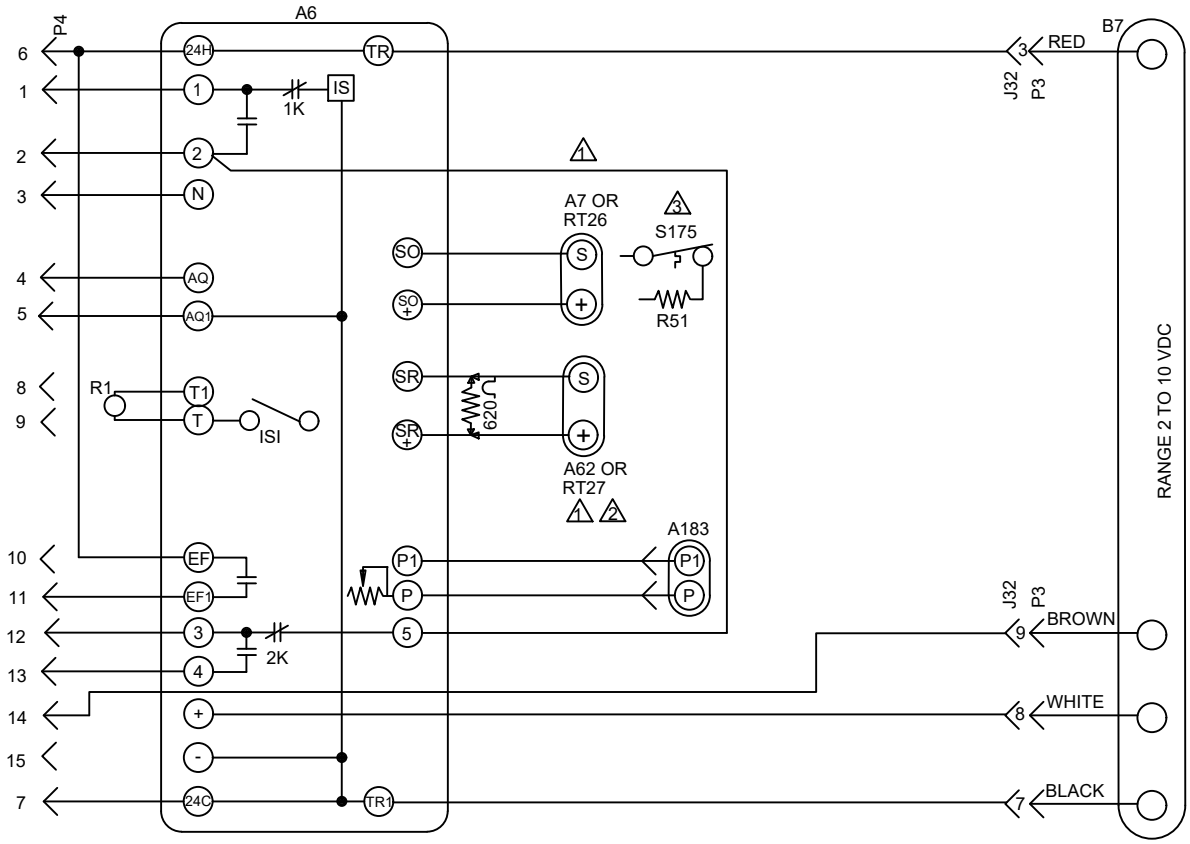

KEY	COMPONENT
A6	CONTROL-SOLID STATE ENTHALPY
A7	SENSOR-SOLID STATE ENTHALPY
A62	SENSOR-ENTHALPY, INDOOR
A183	CONTROL, VFD BOARD
B7	MOTOR-DAMPER, ECONOMIZER
J32	JACK-ECONOMIZER ADAPTOR
P3	PLUG - LESS ECONOMIZER
P4	PLUG - ECONOMIZER
R1	SENSOR-MIXED AIR OR SUPPLY AIR
R2	POT-MINIMUM POSITION
RT26	SENSOR-OUTDOOR AIR TEMP.
RT27	SENSOR-INDOOR AIR TEMP.
S175	THERMOSTAT, SENSIBLE TEMP.

1. RT26 AND RT27, TEMPERATURE SENSORS MAY BE USED INSTEAD OF A7 AND A62 ENTHALPY SENSORS
2. A62 ENTHALPY SENSOR OR RT27 USED FOR DIFFERENTIAL SENSING
3. OPTIONAL OUTDOOR THERMOSTAT TO REPLACE RT26 SENSIBLE SENSOR

DESIGNATES OPTIONAL WIRING

CLASS II FIELD WIRING

2022/07	WIRING DIAGRAM 537933-02	07/22
ACCESSORIES		
ECONOMIZER FOR ELA/EL_XA UNITS		
SECTION D		REV. 0
Supersedes 537933-01	New Form No. 537933-02	